policart™
the only red you can trust

06/03/2019

Scheda Prodotto Mod. 003 rev. 04

COMPANY NAME	
ADDRESS	
CONTACT PERSON	

MACHINE TYPE

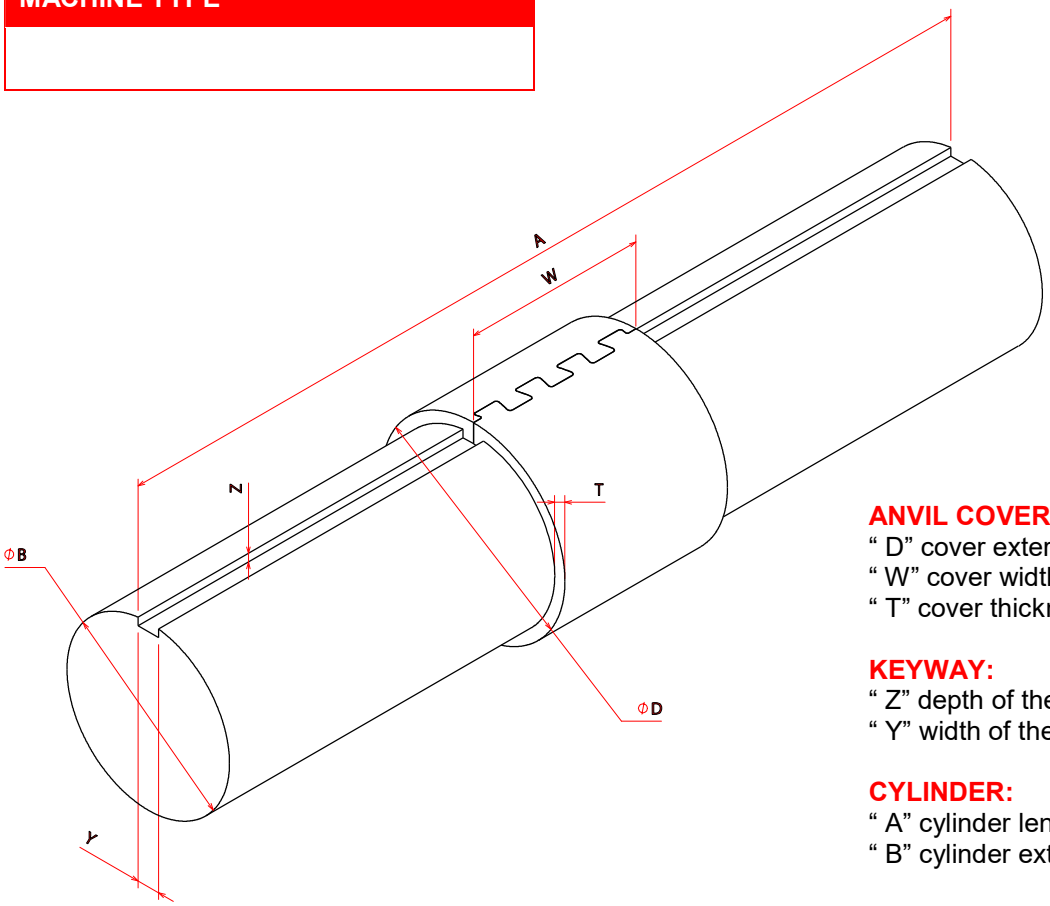

ANVIL COVER:
" D" cover external diameter
" W" cover width
" T" cover thickness

KEYWAY:
" Z" depth of the keyway
" Y" width of the keyway

CYLINDER:
" A" cylinder lenght
" B" cylinder external diameter

	mm
D cover external diameter	
W cover width	
T cover thickness	
Z depth of the keyway	
Y width of the keyway	
B cylinder external diameter	
cylinder lenght	

Existing Blanket/Anvil Part number		
Equalizer ?	Yes	No

Policart s.r.l.
Zona Ind.le Villafranca | Via Po s/n angolo Via Tevere | 21043 Castiglione Olona (VA) | Italy
T +39 0331 69 16 00 | F +39 0331 69 16 61 | info@policartsrl.com | www.policartsrl.com
PI/VAT IT 02429730126

Policart, the Policart logo, the red color for anvil covers are trademarks